# General

This assembly information is an integral part of our terms of sales and delivery. We shall be compelled to reject any guarantee claims in event of non-observance of these guidelines.

The specified axle loads should not be exceeded. The centre of gravity heights and directions in the installation instructions are to be respected. For localization it has to be considered that in case of semi-trailers the load must be stabilized by the lower fifth wheel of the truck. We would like particularly point out that sufficient clearance for free wheel rotation is to be considered for lowered vehicles.

| 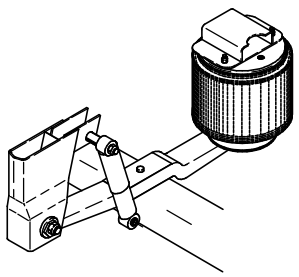 | 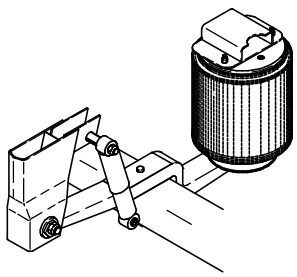 | 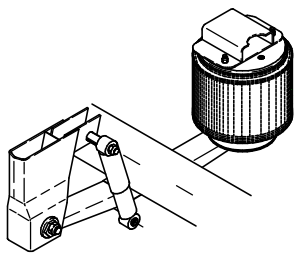 |
|---|---|---|
| **Model LR**<br>Register 2 [1] | **Model NLR**<br>with cranked spring<br>Register 2 [1] | **Model TLR**<br>for low loader axles<br>Register 2 [1] |

1) gigant product catalogue

# Construction description

gigant – air suspension units can be used as single-axle or multi-axle units.

The parabolic trailing arms assume the entire guiding forces of the axle. The braking moment is also taken up via trailing arms. The U-shaped arrangement of trailing arms and the axle form a stabiliser which stabilises the vehicle and counteracts the rolling moment with transverse acceleration.

The guiding forces which are taken up by the spring are transmitted at the horizontal level exclusively via the air suspension brackets in the vehicle chassis. The vertical forces are also supported via the air bellows as well as via the air suspension brackets. The chassis supports are to have suitable diagonal members to take up forces which occur in the vehicle chassis. No guarantee can be assumed in the event of any damage in the case of insufficient support.

# Mounting of air suspension bracket

## General

The latest generation of gigant front brackets are suitable for being welded on to the more and more frequently used narrow bottom flanges due to a thinner taper in with.

**Important information:**

- **In order to avoid damage when welding the earth connection must not be fitted to any rotary components of the axle.**
- **It is not permitted to weld on fit the earth connection to the suspension spring.**
- **Suspension springs are to be protected against contact with weld splatter, electrodes and welding clamps (notch effect).**

## Welding sequence

The stipulation for welding sequence is that no tack seams or welding seam starts are permitted within 50mm of the corner edges of the air suspension brackets.
Welded seams (proposal gigant a4◺ according to DIN1912) are to be produced according to quality category B of DIN EN ISO 5817.

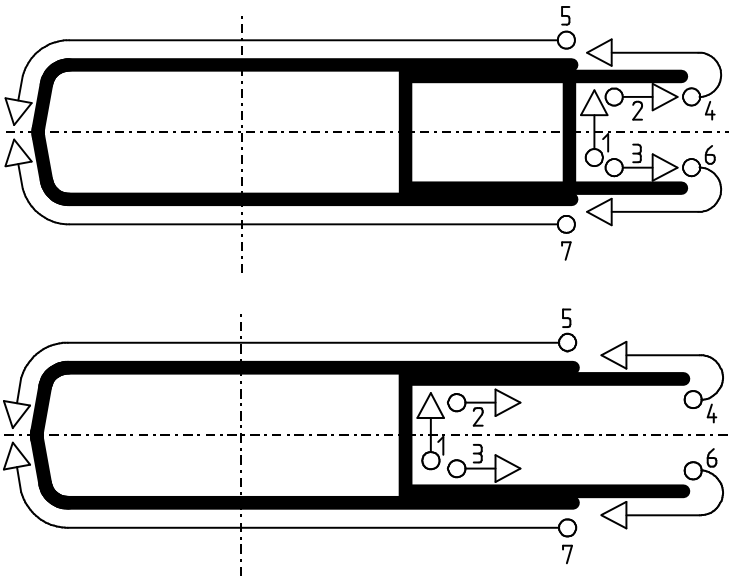


## Side support air suspension bracket

It is necessary to brace the air suspension brackets at the sides in order to provide an appropriate abutment for the shear forces. This side brace is to be supported by a transverse frame in the chassis in order to introduce the forces into the vehicle chassis equally.

When using a C-profile type front bracket assembly, no additional side support is needed.

Suggestion for side support

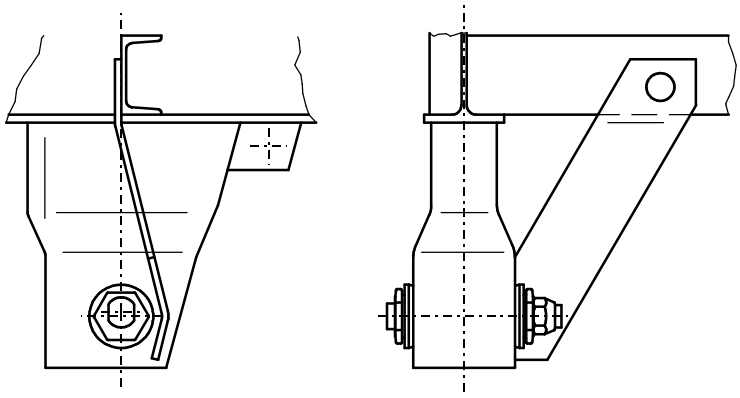

**Special note:**

For highly flexible (torsion - weak) chassis suitable torsion-weak but nevertheless bending resistant support of front bracket has to be used (e.g. platform trailers).

For a torsion – resistant chassis the support of the front bracket can be accordingly resistant (e.g. tank trucks, bulk loading and delivery body vehicles).

We generally recommend open profiles such as U – profiles. Torsion – resistant, closed profiles should be avoided as chassis cross members (risk of fissures at the weld joints).

**Attention:**

The data and instructions stated here may only be regarded as proposals since the bracing and dimensioning depend on the type of vehicle and its conditions of use. This data is only known to the vehicle producer and is to be taken into consideration by producer in the construction.

# Bellows mounting

## *General handling*

The roll bellows are a high – quality product made by resistant materials. These materials give the bellows some unusual properties for use in the commercial vehicle sector. However these materials have some restrictions. These include paying attention during mounting that the roll bellows are protected from welding spatters and excess heat.

## *Assembly*

Assembly is effected on the prepared vehicle chassis. The dimensions for the attachment of the bellows can be seen in the installation drawing for the air suspension set. The drill holes are to conform to DIN ISO 273 on average. The distance of the holes is to be produced according to DIN ISO 2768m.

The design of the flanged plate takes the bearing capacity of the chassis support into consideration in order to conform to the state of the art. Thus no guarantee can be assumed for damage to the bellows due to in correct bracing of the bellows.

The bending forces ($F_B$) resulting from the offset (VS) have to be compensated via the appropriate gusset plates or cross members. The air bellow is preferably mounted with the studs M12 and air supply in board. Please see installation drawings for offset.

Suggestion support of air bellow

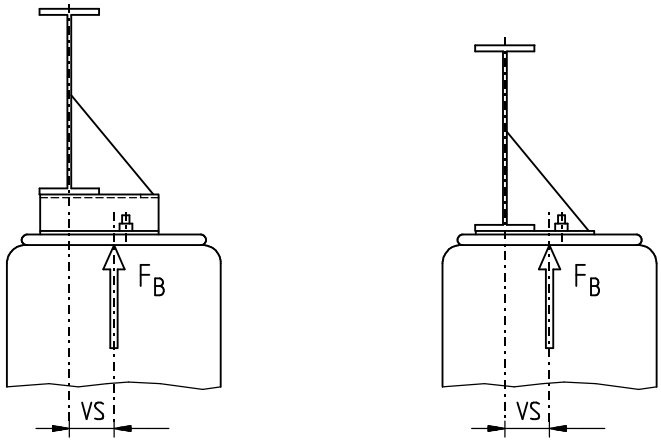


bellow with top bracket  bellow with plate

## Use

Compressed air is applied to the air bellows for use in commercial vehicles. This compressed air is to be free from foreign substances, in particular such substances as may cause sustained damage to the air bellows. Guarantee claims may only be enforced if the vehicle is fitted with in – line filters in the compressed air supply lines and signal lines.

## Leakproofness

The air bellows are subject to constant production fluctuations arising from the production process sequences. These inevitably lead to tolerances with regard to dimensions, technical function as well impact on leakproofness. It is normal for air bellows to lose a slight amount of air. The limit which may escape for new bellows is assumed as 0,5 bar within 24 hours at an initial pressure of 2 bar. The bellows are regarded as leakproof as long as this value is maintained as a minimum.

**Attention:**

The data and instructions stated here may only be regarded as proposals since the bracing and dimensioning depend on the type of vehicle and its conditions of use. This data is only known to the vehicle producer and is to be taken into consideration by producer in the construction.

## Positional tolerances

The bracket position must conform to certain tolerances to ensure subsequent assembly of the axle with mounted spring.

**Position of brackets longitudinally to the direction of travel:** A line through the four hole centre points in the air suspension brackets should form the base of an isosceles triangle. The intersecting point of the two sides should be at the traction point of the vehicle. These sides should not exceed a deviation from the equilaterally of ± 2 mm. If this tolerance is greater then only a reduced tracking quality can be achieved at subsequent tracking adjustment of the vehicle.
For parallelism, the centre lines of the long holes in the air suspension brackets of the other axle centre lines, is guaranteed by adherence to the tolerance by ± 1 mm.

**Position of the brackets crosswise to the direction of travel:** The distance of the brackets should not exceed an accuracy of ± 1 mm. Otherwise the subsequent mounting of the axle with the mounted spring would be at risk.

The axes through the centre point of the long holes of the respective bracket are to have concentricity to the second bracket of an axle assembly of 1 mm.

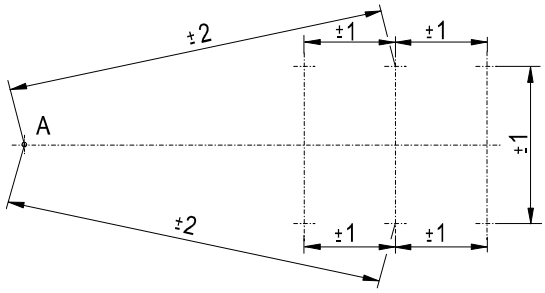


### *Surface protection*

Application of a state-of-the-art surface coating is always necessary for the bracket; this coating is to protect the material from weathering. The bracket is supplied with a temporary surface protection.
In coating the brackets, attention is to be paid that the film thickness at the areas in contact with components is a maximum of 30µm. These include the contact surfaces of the eccentric bush, the spacer and the shock absorbers.

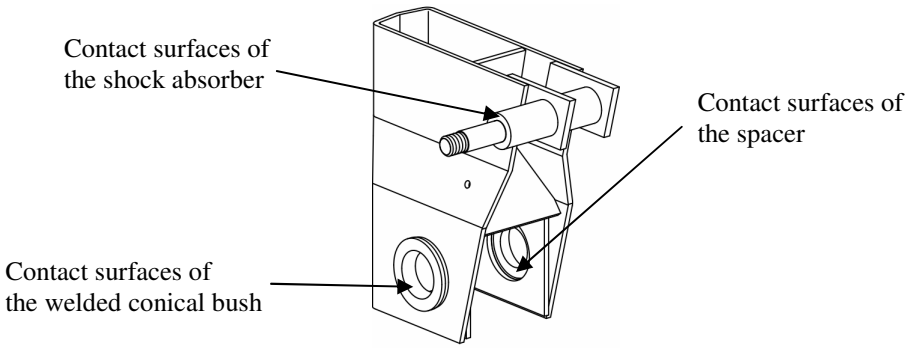


# Axle set assembly

### *Subassembly*

An axle set comprises the axle with mounted air suspension springs and also the brake cylinder on request. This subassembly is assembled on a mounting device. This permits mounting of the axle set without problem if the tolerances in the section “positional tolerances for the air suspension brackets” are observed. This assembly in the device ensures that the dimensional tolerances required are observed.

The alignment of the two guidance springs be made i.e. by setting out the spring lug by a round material Ø = 30 mm, if the mounting is done outside of gigant facility.

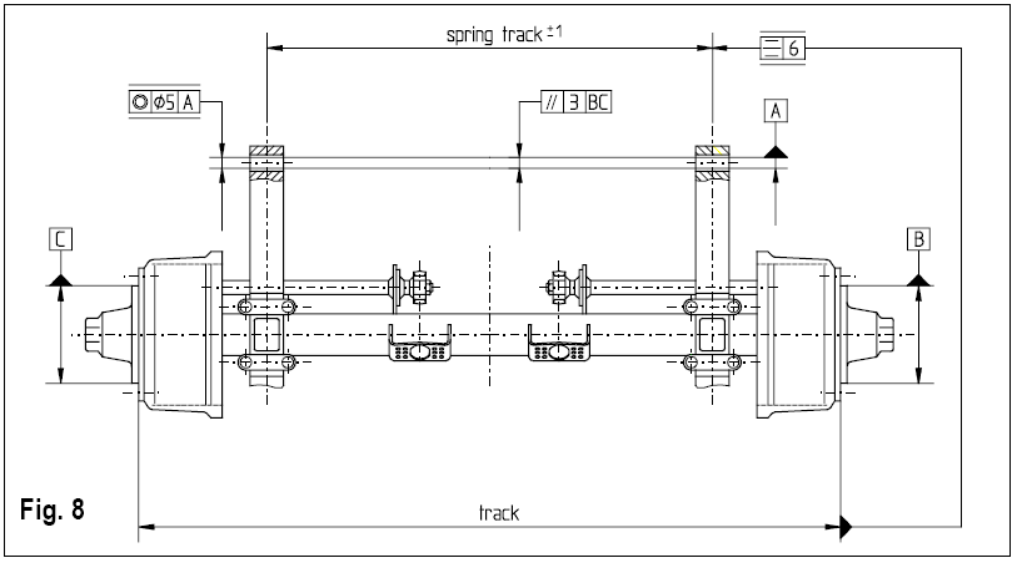

Fig. 8

**Attention:**

There must not occur any irregular distortions by irregular tightening of the U – bolts. Therefore the nuts of the U – bolts have to be tighten stepwise and mutual, till the correct tightening moment will be reached. The tightening force can be looked for at the set drawing or taken from the maintenance book.

The spring bolt is only an assembling help and has to be placed in the hole of the axle plate. The spring bolt does not take over any guiding forces !

## *Subassembly mounting*

Before the eyes can be fitted into the air suspension bracket, the spacer must be placed inside of the wear plates at the bracket. The spacer serves as a cardanic movement stop for the spring eye. This provides the vehicle with reliable performance. The spacer also serves as a wearing disc and can be replaced if required. After the four spacer have been placed at the inside of the brackets, the axle can be fitted into the air suspension brackets with the springs. The spring bolts can then be pushed through the bracket and the silent block with a mounted eccentric bush from the outside. The second eccentric bush is positioned on the opposite and fixed with a security nut. Attention must paid before tightening the security nut that the circular marking on the eccentric bush points to the ground when vehicle is upright.

## *Track adjustment*

The spring bolt is to be tightened with 200Nm in this position. Using an open – ended spanner AF60, the axle with eccentric bush can now be moved lengthwise and track adjusted.

Attention – you have to look for that the booth eccentric bushes of one air suspension bracket are in the same angle position and the marking points are exactly opposite each other.

Once the track has been adjusted, the security nut is tightened with the tightening procedure stated and it has to be taken for, that the eccentric bushes do not twist.

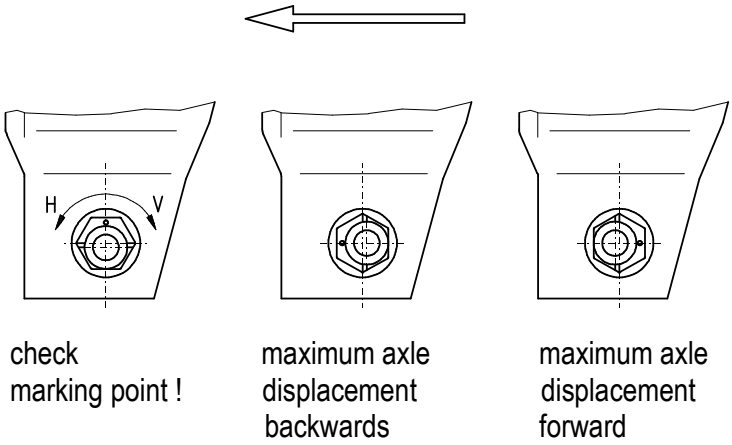


## Bellows mounting

The instructions for fitting the bellow with piston bottom on the spring can be seen in the installation drawing for the air suspension set.

## Ride height controller

There is a drilled plate welded to the axle centre for attachment of ride height controller; the rods of the controller can be attached to this plate. We refer to the manufactures documentation for adjustment of the controller. The control system of the controller must be ensure that the air feed to the air bellows is closed at the maximum lifting height of the air suspension unit. The dimension for the maximum lifting height can be seen in the unit drawing.

## Installation air suspension

A high driving safety records, the gigant – air suspension for their high roll stability, and low body roll during cornering. This is achieved through a constructive torsion unit of axle beam, spring and the air bellow.

Since the air bellow has a significant impact on driving safety, we recommend for maximum driving safety and performance in critical driving situations, the use of a dual-circuit air suspension installation with cross choke. For installation of the air suspension, please refer to the documentation of the manufacturer of the air spring installation.

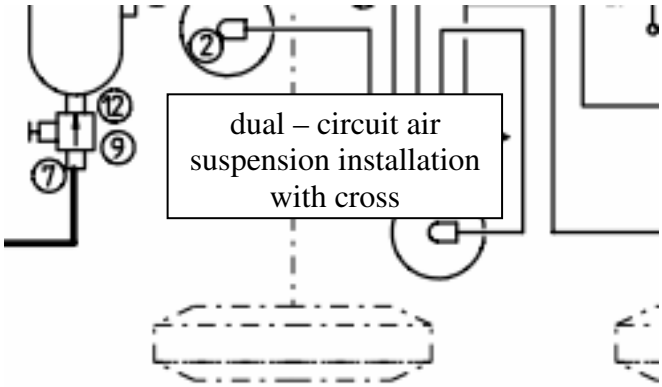

In case of using single-circuit air suspension installation may result in higher loads on the axle and suspension components, which can lead to bogie damage. Warranty claim for any reason can not be accepted by gigant.

## Ride height restriction

In certain applications such as tipper or container chassis, we specify the use of catch straps which restricts rapid upward movement of the air suspension unit in case of sudden unloading of vehicle and protects the chassis from mechanical damage. The use of quick – action ventilating valves with ventilating control is possible under certain preconditions, only with the approval of gigant.

## Catch straps

These components serve for lifting limitation of the gigant air suspension. For gigant air suspensions normally neither catch straps are necessary.

Nevertheless, we recommend:

- Catch straps for tipper trailers ( at least on the last axle ) or chassis of containers trailers as well for vehicles that are quickly unloaded.
- Catch straps for vehicles that are frequently loaded or lifted by means of a crane.

**Fixation for catch straps**

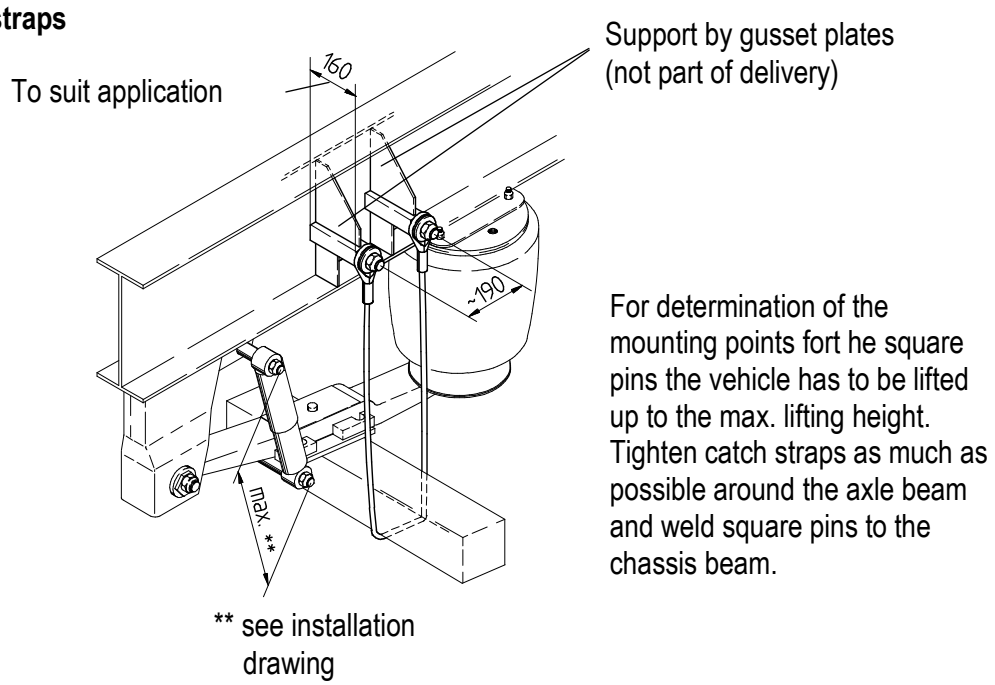


**Attention:**

The data and instructions stated here may only be regarded as proposals since the bracing and dimensioning depend on the type of vehicle and its conditions of use. This data is only known to the vehicle producer and is to be taken into consideration by producer in the construction.

### Brake cylinder

If no brake cylinder has been fitted by us, then only brake cylinders which conform to the brake specifications and approval guidelines of the calliper manufacturer may be used.

### Assembling of suspension with self-steering axle

For assembling the suspension with a self-steering axle it is imperative to follow instruction ST232 and for low loader also the technical notification TM 01/2012.
Download: www.gigant-group.com (Service, Technical Notification)

### Axle lift

gigant – air suspensions can be equipped with different axle lift types (Register 2 at gigant product catalogue) .

The twin lift is characterized by is very compact construction and can be used for most air suspensions with one –leaf springs. Due to the fact that it is exclusively mounted on the front bracket and the spring, no further bracings are necessary.

The side axle lift is particularly suitable for lifting the first axle, and with sufficient axle spacing for the 2nd and 3rd axle, too. The axle lift lever is mounted under the spring at the front bracket and the lift bellow on the chassis of the vehicle.

For a side axle lift no additional transverse beams are necessary.

For lifting the middle or rear axles or in case of restricted space the central axle lift is especially suitable. This axle lift is mounted at the centre of the vehicle by means of an additional bracket at a cross member of the chassis. The bellow forces are also to be compensated by a cross member.

Control of the axle lift axles can be found in the connecting diagrams at the manufactures documentation of the air system for the vehicle.

For air suspensions with axle lift the ride height has to be adjusted to a minimum exaust distance of approx. 100 mm.

**Attention:**

**Before carrying out any maintenance works on the vehicle the axle lift device has to be turned off by closing the cut-off cock.**

# gigant C - profile constructional description

The gigant C – profile air suspensions distinguish from the standard series by the shaped C –profile linking each side. This profile largely takes over all lateral forces leading into the suspension. Depending on the chassis construction chassis cross members can be omitted in the suspension area.

The trailer manufacturer nevertheless has to check whether the strength of his chassis is sufficient, i.e. whether support members can be omitted.

Due to very narrow construction of the mountings the air suspensions can be welded while the trailer lying on is back.

Detailed information can be found in the installation drawings for air suspensions available upon request.

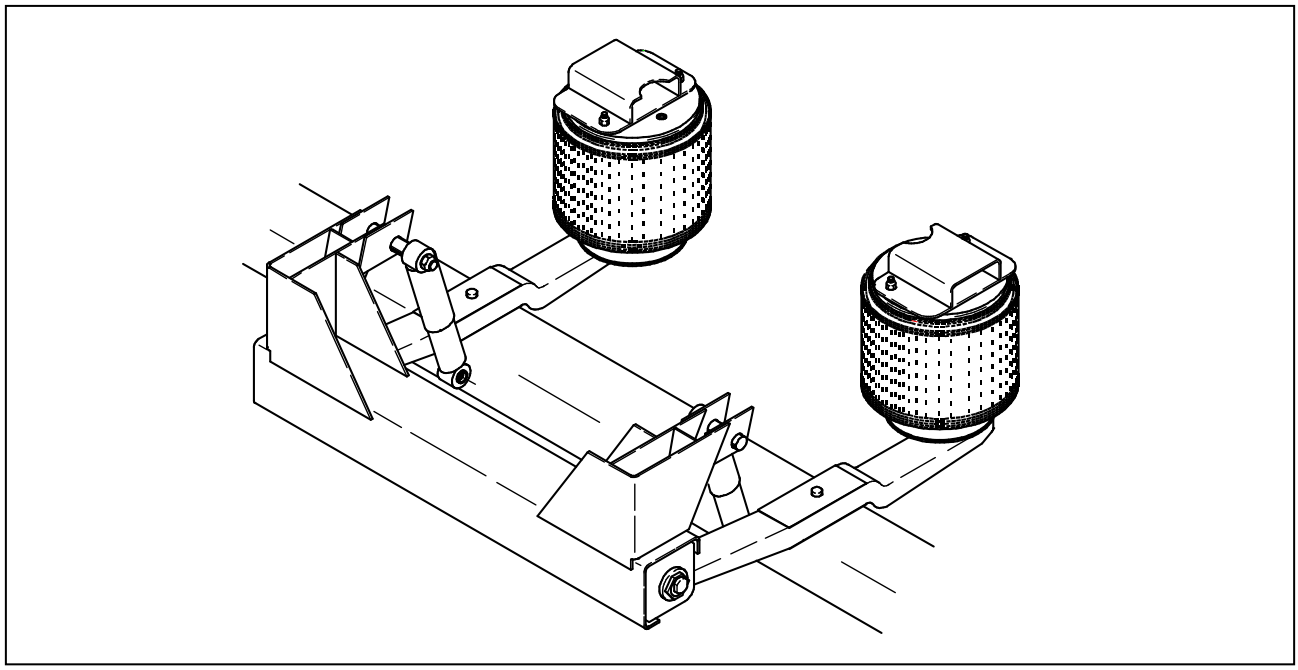

## Installation

gigant C – profiles are also suitable for being easily welded to the frequently used narrow bottom flanges, due to the small width of the C –profile air support bracket.

Welded seams (proposal gigant a4◺ according to DIN1912) are to be produced according to quality category B of DIN EN ISO 5817.

Welding sequence

1 ; 2 and 3 = approx. 50 mm

Please avoid penetration notches and end craters !

* Do not weld to the edge of the chassis beam !

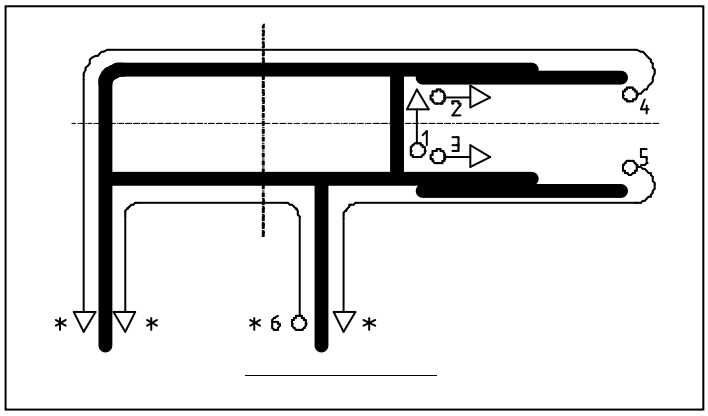

## *Prescribed tightening torques*

| Designation | Thread | Tightening moment |
|---|---|---|
| stud (bellow)<br>screw (double bellow) | M12<br>M8 | 75 – 80 Nm<br>20 – 25 Nm |
| draw bar pin – piston base (bellow) | M22x1.5 | max. 350 Nm |
| piston base plate – spring (bellow)<br>stud – spring (double bellow) | M16<br>M16 | 270 – 290 Nm<br>170 – 190 Nm |
| shock absorber pin | M22x1.5 | max. 350 Nm |
| U - bolt (with locknuts) | M20 | 340 – 380 Nm |
| U - bolt (with washer and nut) | M20x1.5 | 580 – 630 Nm |
| U - bolt (with combinut) | M22x1.5 | 650 – 700 Nm |
| U - bolt (with locknuts) | M24 | 650 – 720 Nm |
| U - bolt (with washer and nut) | M24x2 | 850 – 950 Nm |
| spring eye pin | M27x1.5 | 550 – 600 Nm |

The used locknuts have to replaced after every removals !

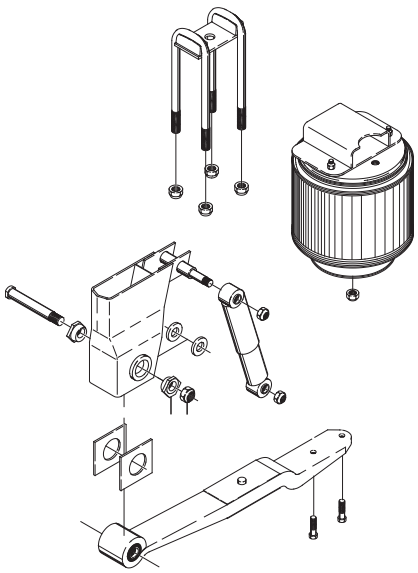

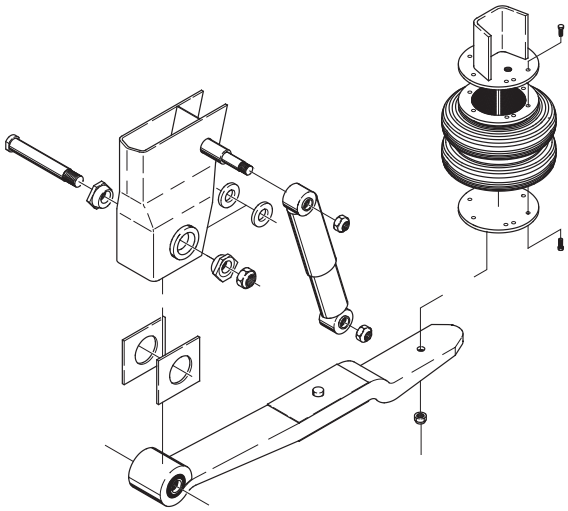

| Index | Description of modification | Date | Signature |
|---|---|---|---|
| 2 | Document revised | 14.04.2011 | Hullmann |
| 3 | Issue installation of air suspension added | 07.06.2012 | Hullmann |
| 4 | Issue assembling of suspension with self-steering axle added | 03.08.2012 | Hullmann |