NEW !

gigant
the driving force

Gigant 5,5t axle (drum / disk brake) with suspension FB80

Axle GH7 / DH7
Adjusting the tapered roller bearing has been greatly simplified in the new 5.5 t axle with drum or disk brake. The axle with drum brake is executed with a monobloc brake support plate for improved brake geometry.

Features of the new 5.5 t axle:

- Available with disk or drum brake
- For single and dual tyres
- New axle nuts for simple and safe adjustment of tapered roller bearing
- PAN17 disk brake from WABCO
  - o Patented angle wear compensation
  - o Compact construction
  - o Excellent rough-road properties
- KTL coating
- Available as a complete set with air suspension unit or mechanical unit
- The disk brake version can also be supplied with the brake cylinder fitted
- Ideal for tandem units with a wheelbase <1,000 mm.
  Permits use of advantageous registration and driving licence regulations
- Optional with ABS

New axle nuts for simple and safe adjustment of tapered roller bearing

gigant
the driving force

Air suspension unit

The previously known **FB80 unit** for axle loads of up to 6,500 kg has been thoroughly **re-engineered**.

The result is a weight-optimised suspension unit that fulfils all current requirements in ride height and application in one useful module. (The connection dimensions of the air suspension support at the bottom chords have changed). All previous FB80 air suspension units have been discontinued and are to be superseded by the new series.

Features of the new FB80 unit:

- The left and right version is the same with symmetrical spring hanger.
- Weight reduction by elimination of the piston head of the air suspension bellows (only standard unit).
- The distance of the screw-on bolts of the air bellows has been changed to the standard dimension 150 mm.
- Simplified wheel alignment with gigant eccentric bush.
- Ride height range from 220 to 360 mm (TKLR) or 395 - 540 mm (KLR)
- Weight saving compared to previous series version
- The new air suspension support design means that the side support of the vehicle must be adapted.
- Incorporation is not compatible with previous version.

Air suspension bellows without piston head in standard unit

Altered connection dimensions of air suspension support at the bottom chords (Measure A)

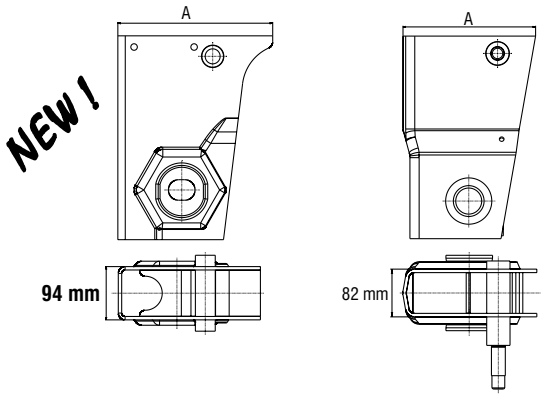

New version		Old version	
Measure A [mm]		Measure A [mm]	
M-Bracket	250	O-Bracket	230
O-Bracket	254	L-Bracket	239
L-Bracket	259	H-Bracket	249

Gigant also supplies this unit as a complete SET with the new re-engineered axle generation GH5 or DH5.

gigant
the driving force

TKLR

RIDEHEIGHT appr. 215 - 360 mm
BELLOW: Ø 300 mm
LIFT IN TOTAL: 180 mm

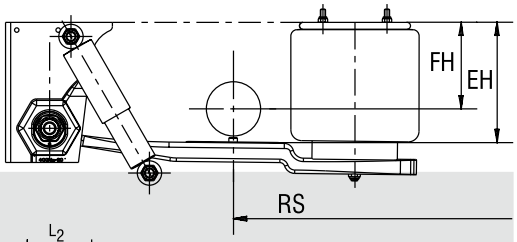

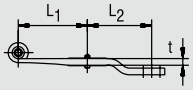

MODEL	FH ride height	RS wheel base min.	PERM. AXLE LOAD (kg)	ORDER NO.	DESCRIPTION	L1	L2	t	EH inst. height	LOWERING	DRAWING NO.
TKLRM	215 - 265	995	6500	00687083	TKLRM 43/6,5.1	430	285	1x45	280 +50/-0	ca. 60	71.442-4
TKLRO	230 - 280	995	6500	00687082	TKLRO 43/6,5.1	430	285	1x45	320 ±25	ca. 85	71.437-4
TKLR	275 - 325	995	6500	00687084	TKLR 43/6,5.1	430	285	1x45	370 +20/-30	ca. 91	71.443-4
TKLR	310 - 360	995	6500	00687085	TKLR 43/6,5.1	430	285	1x45	400 ±25	ca. 80	71.444-4

KLR

RIDEHEIGHT appr. 395 - 540 mm
BELLOW: Ø 300 mm
LIFT IN TOTAL: 180 mm

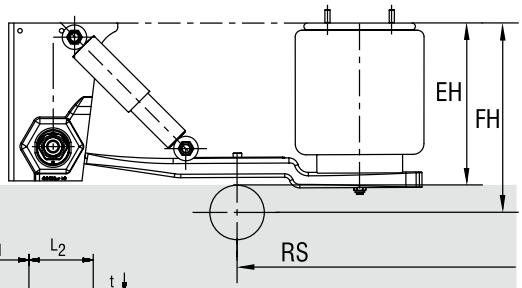

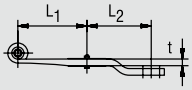

MODEL	FH ride height	RS wheel base min.	PERM. AXLE LOAD (kg)	ORDER NO.	DESCRIPTION	L1	L2	t	EH inst. height	LOWER-ING	DRAWING NO.
KLRM	395 - 445	995	6500	00681010	KLRM 43/6,5.1	430	285	1x45	329 +50/-0	ca. 62	71.452-4
KLRO	410 - 460	995	6500	00681011	KLRO 43/6,5.1	430	285	1x45	369 ±25	ca. 88	71.453-4
KLR	450 - 500	995	6500	00681012	KLR 43/6,5.1	430	285	1x45	419 +15/ -35	ca. 95	71.454-4
KLR	490 - 540	995	6500	00681013	KLR 43/6,5.1	430	285	1x45	444 +30/ -20	ca. 80	71.455-4

gigant
the driving force

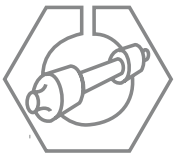

PROTEC-Axle

with disc brake
D335 x 34
for tyre 17,5”

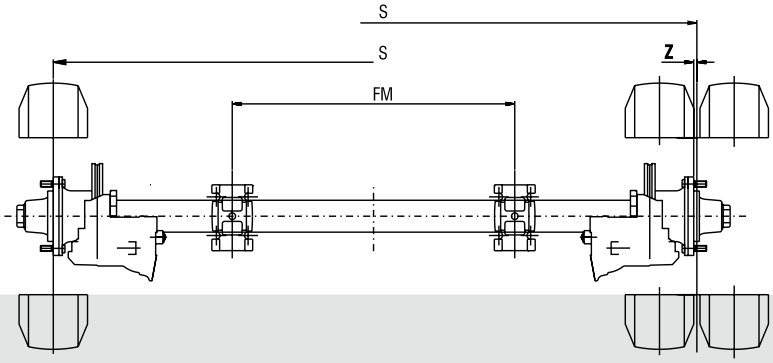

TYPE OF AXLE AXLE BEAM	AXLE LOAD (kg)	ET (mm)	SINGLE TYRE TRACK (mm)	SINGLE TYRE SPRING TRACK (mm)	SINGLE TYRE EXAMPLE OF TYRE	TWIN TYRE TRACK (mm)	TWIN TYRE SPRING TRACK (mm)	TWIN TYRE EXAMPLE OF TYRE	NUMBER OF STUDS	POSSIBLE AXLE PLATES[5]
DH7 05506 3334 O 101,6	5500	0	1800	980	245/70 R17,5	1800	980	205/65 R17,5	6/160.8/205 M18x1,5	Fig 22 Fig 24
			1900	1100		1920	1100			
			1900	1200						
			1920	1100						
			2000	1300						
			2100	1400						

PROTEC-Axle

with drum brake
brake 300 x 100
for tyre 15” to 17,5”

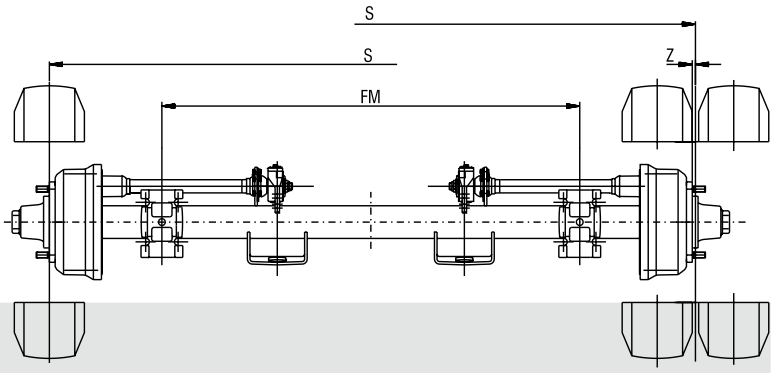

TYPE OF AXLE AXLE BEAM	AXLE LOAD (kg)	ET (mm)	SINGLE TYRE TRACK (mm)	SINGLE TYRE SPRING TRACK (mm)	SINGLE TYRE EXAMPLE OF TYRE	TWIN TYRE TRACK (mm)	TWIN TYRE SPRING TRACK (mm)	TWIN TYRE EXAMPLE OF TYRE	NUMBER OF STUDS	POSSIBLE AXLE PLATES[5]
GH7 05506 3010 O 101,6	5500	0	1800	980	245/70 R17,5	1800	980	205/80 R15	6/160.8/205 M18x1,5	Fig 22 Fig 24
			1900	1100		1920	1100			
			1900	1200						
			1920	1100						
			2000	1300						
			2100	1400						

Subject to technical changes · Stand 9/2009 · M150215